sylvan

SL43E WITH LATCH

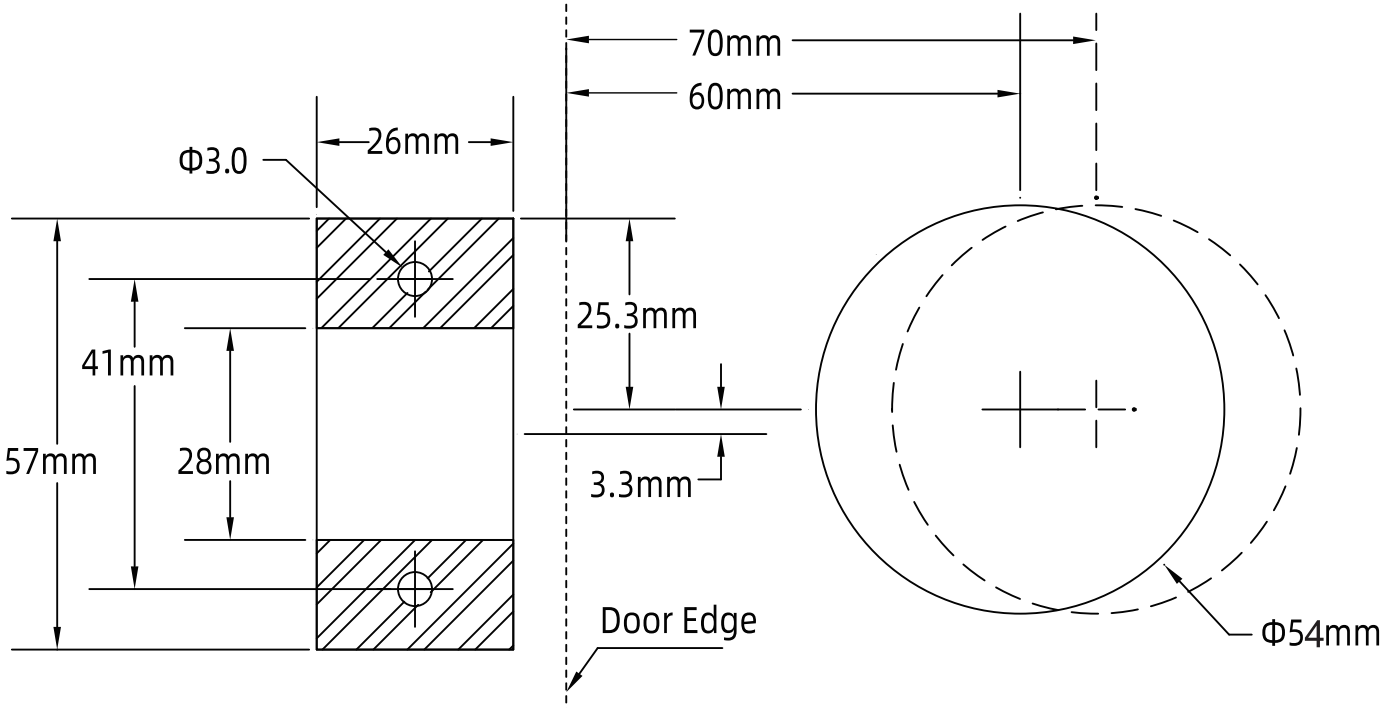

Drilling Template

sylvan

SL43E WITH LATCH

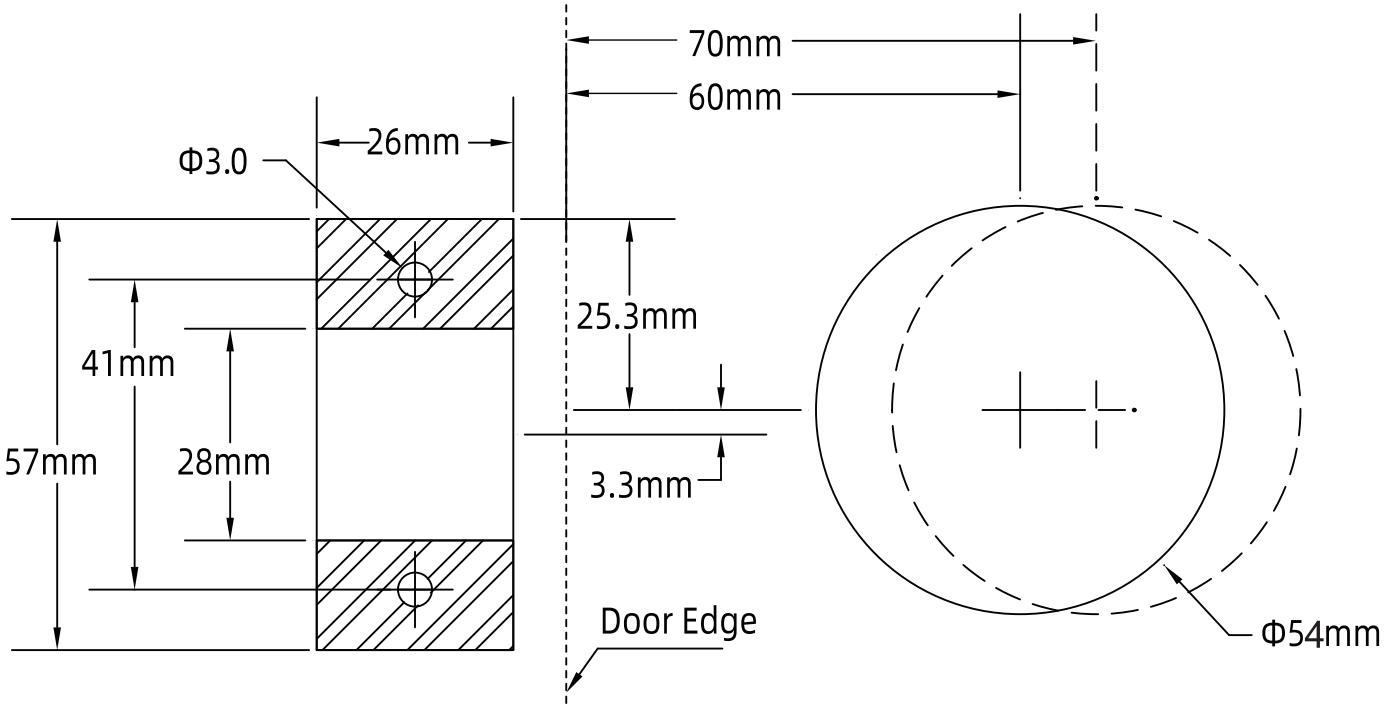

Drilling Template